INTERNATIONAL STANDARD

ISO 13408-2

Second edition
2018-01

Aseptic processing of health care products —

Part 2: Sterilizing filtration

Traitement aseptique des produits de santé —

Partie 2: Filtration stérilisante

Reference number
ISO 13408-2:2018(E)

© ISO 2018

Copyright International Organization for Standardization
Provided by IHS Markit under license with ANSI
No reproduction or networking permitted without license from IHS

Licensee=Becton Dickinson - Loc 1-9, 11, 17, 21, 24, 29, ./5984713001, User=Chiu
Not for Resale, 02/10/2020 19:01:06 MST

COPYRIGHT PROTECTED DOCUMENT

© ISO 2018

All rights reserved. Unless otherwise specified, or required in the context of its implementation, no part of this publication may be reproduced or utilized otherwise in any form or by any means, electronic or mechanical, including photocopying, or posting on the internet or an intranet, without prior written permission. Permission can be requested from either ISO at the address below or ISO's member body in the country of the requester.

ISO copyright office
CP 401 • Ch. de Blandonnet 8
CH-1214 Vernier, Geneva, Switzerland
Tel. +41 22 749 01 11
Fax +41 22 749 09 47
copyright@iso.org
www.iso.org

Published in Switzerland

Copyright International Organization for Standardization
Provided by IHS Markit under license with ANSI
No reproduction or networking permitted without license from IHS
Licensee=Becton Dickinson - Loc 1-9, 11, 17, 21, 24, 29, ./5984713001, User=Chiu
Not for Resale, 02/10/2020 19:01:06 MST

Contents

Page

Foreword ... **v**
Introduction ... **vi**
1 Scope ... **1**
2 Normative references ... **1**
3 Terms and definitions ... **2**
4 Quality system elements ... **3**
4.1 General ... 3
4.2 Management responsibility ... 3
4.3 Procurement of filters ... 3
5 Sterilizing filter characterization ... **3**
5.1 General ... 3
5.2 Microbial removal effectiveness ... 4
5.3 Material effects ... 4
5.4 Environmental considerations ... 5
6 Process and equipment characterization ... **5**
6.1 General ... 5
6.2 Risk management ... 5
6.3 Process characterization ... 6
6.4 Equipment characterization ... 6
7 Fluid definition ... **7**
7.1 General ... 7
7.2 Microbiological quality ... 8
8 Process definition ... **8**
8.1 General ... 8
8.2 Filter definition and characterization ... 9
8.2.1 General ... 9
8.2.2 Compatibility between the filter and fluid ... 9
8.2.3 Filter use ... 10
8.3 Filtration process definition ... 10
8.4 Integrity testing process definition ... 11
9 Validation ... **12**
9.1 General ... 12
9.2 Validation of fluid-specific microbial retention by sterilizing filters for liquids ... 12
9.2.1 General ... 12
9.2.2 Test organism ... 13
9.3 Validation of the integrity test for sterilizing filters for liquids ... 14
9.4 Validation of filter interactions with the process fluid ... 15
9.5 Validation of the sterilization of filter system ... 15
9.6 Validation of fluid-specific microbial retention by sterilizing filters for gases ... 15
9.6.1 General ... 15
9.6.2 Aerosol retention ... 15
9.6.3 Validation of physical integrity testing ... 15
9.6.4 Compatibility and service life ... 16
9.6.5 Validation of the sterilization of the filter system for gases ... 16
10 Routine monitoring and control ... **16**
11 Product release from sterilizing filtration ... **16**
12 Maintaining process effectiveness ... **17**
12.1 General ... 17
12.2 Recalibration ... 17

© ISO 2018 – All rights reserved

Copyright International Organization for Standardization
Provided by IHS Markit under license with ANSI
No reproduction or networking permitted without license from IHS
Licensee=Becton Dickinson - Loc 1-9, 11, 17, 21, 24, 29, ./5984713001, User=Chiu
Not for Resale, 02/10/2020 19:01:06 MST

12.3 Maintenance of equipment ... 17
12.4 Requalification ... 17
12.5 Assessment of change ... 18

Annex A (informative) **Guidance on the application of this document** ... **19**

Bibliography ... **34**

© ISO 2018 – All rights reserved
Copyright International Organization for Standardization
Provided by IHS Markit under license with ANSI
No reproduction or networking permitted without license from IHS
Licensee=Becton Dickinson - Loc 1-9, 11, 17, 21, 24, 29, ./5984713001, User=Chiu
Not for Resale, 02/10/2020 19:01:06 MST

Foreword

ISO (the International Organization for Standardization) is a worldwide federation of national standards bodies (ISO member bodies). The work of preparing International Standards is normally carried out through ISO technical committees. Each member body interested in a subject for which a technical committee has been established has the right to be represented on that committee. International organizations, governmental and non-governmental, in liaison with ISO, also take part in the work. ISO collaborates closely with the International Electrotechnical Commission (IEC) on all matters of electrotechnical standardization.

The procedures used to develop this document and those intended for its further maintenance are described in the ISO/IEC Directives, Part 1. In particular the different approval criteria needed for the different types of ISO documents should be noted. This document was drafted in accordance with the editorial rules of the ISO/IEC Directives, Part 2 (see www.iso.org/directives).

Attention is drawn to the possibility that some of the elements of this document may be the subject of patent rights. ISO shall not be held responsible for identifying any or all such patent rights. Details of any patent rights identified during the development of the document will be in the Introduction and/or on the ISO list of patent declarations received (see www.iso.org/patents).

Any trade name used in this document is information given for the convenience of users and does not constitute an endorsement.

For an explanation on the voluntary nature of standards, the meaning of ISO specific terms and expressions related to conformity assessment, as well as information about ISO's adherence to the World Trade Organization (WTO) principles in the Technical Barriers to Trade (TBT) see the following URL: www.iso.org/iso/foreword.html.

This document was prepared by Technical Committee ISO/TC 198, *Sterilization of health care products*.

This second edition cancels and replaces the first edition (ISO 13408-2:2003), which has been technically revised.

A list of all parts in the ISO 13408 series can be found on the ISO website.

© ISO 2018 – All rights reserved

Copyright International Organization for Standardization
Provided by IHS Markit under license with ANSI
No reproduction or networking permitted without license from IHS
Licensee=Becton Dickinson - Loc 1-9, 11, 17, 21, 24, 29, ./5984713001, User=Chiu
Not for Resale, 02/10/2020 19:01:06 MST

Introduction

ISO 13408-1 covers general aspects of aseptic processing. Several processes including sterilizing filtration, lyophilization, clean and sterilization in place, isolator systems, and alternative processes for medical devices and combination products were found to be in need of supplementary information, which was too extensive to be included in the corresponding annexes to ISO 13408-1. This information is presented in ISO 13408-2 to ISO 13408-7.

Sterilizing filtration is a critical step in an aseptic manufacturing process. Validation of sterilizing filtration processes can be complex and is generally conducted in both a process and product specific manner. This document describes requirements that, if met, will provide a sterilizing filtration process that consistently removes microorganisms from a fluid (liquid or gas) without negatively affecting the quality of the filtrate. Furthermore, conformity with the requirements ensures that a sterilizing filtration process is both reliable and reproducible so that a determination can be made, with reasonable confidence, that the sterilizing grade filter/s will provide a sterile filtrate under specified operational conditions. This (the reliability and reproducibility of the filtration process) is essential, as unlike a micro-biocidal sterilization process where process variables can be monitored continuously, microbial retention and physical integrity of a sterilising grade filter cannot be monitored on a continuous basis throughout a filtration process.

Where validation establishes a reproducible relationship between the product-specific bacterial retention capability of a sterilizing grade filter and the physical integrity of that filter, then suitable non-destructive pre-use and post-use filter integrity tests are used to determine whether a full-scale sterilizing filtration process has been conducted successfully. During terminal sterilization the kinetics of inactivation follows a mathematical order and allow calculation of a sterility assurance level (SAL). Removal of organisms from a fluid by filtration does not follow such mathematical order and so the use of the term “sterility assurance level” is not appropriate for product sterilized by filtration.

There has been a significant increase in the development and availability of biopharmaceuticals, biologic-based medical devices and cell-based health care products since publication of the initial 2003 edition of this document. This second edition emphasizes the importance of a thorough understanding of the nature of the indigenous bioburden of a fluid that is to be sterilized by filtration, including its relationship to the test microorganism used to determine microbial retention capability of the sterilizing grade filter. For example, Mycoplasma can cause serious contamination problems during the manufacturing of biopharmaceutical, biotechnological and cell-based health care products. A thorough understanding of the indigenous bioburden enables suitable safeguards to be implemented during development, validation and control of a sterilizing filtration process to ensure the safety and quality of the filtered fluid.

While the activities required by this document have been grouped together and are presented in a particular order, this document does not require that the activities be performed in the order that they are presented. The activities required are not necessarily sequential, as the programme of development and validation may be iterative. It is possible that performing these different activities will involve a number of separate individuals and/or organizations, each of whom undertake one or more of these activities. This document does not specify the particular individuals or organizations to carry out the activities.

Guidance on the application of this document is given in Annex A.

© ISO 2018 – All rights reserved
Copyright International Organization for Standardization
Provided by IHS Markit under license with ANSI
No reproduction or networking permitted without license from IHS
Licensee=Becton Dickinson - Loc 1-9, 11, 17, 21, 24, 29, ./5984713001, User=Chiu
Not for Resale, 02/10/2020 19:01:06 MST

Aseptic processing of health care products —

Part 2: Sterilizing filtration

1 Scope

This document specifies requirements for sterilizing filtration as part of aseptic processing of health care products conducted in accordance with ISO 13408-1. It also offers guidance to filter users concerning general requirements for set-up, validation and routine operation of a sterilizing filtration process.

This document is not applicable to removal of viruses.

Sterilizing filtration is not applicable to fluids that intentionally contain particles larger than the pore size of the filter (e.g. bacterial whole-cell vaccines).

This document is not applicable to high efficiency particulate air (HEPA) filters.

This document does not specify requirements for the development, validation and routine control of a process for removing the causative agents of spongiform encephalopathies such as scrapie, bovine spongiform encephalopathy and Creutzfeldt-Jakob disease. Specific recommendations have been produced in particular countries for the processing of materials potentially contaminated with these agents.

2 Normative references

The following documents are referred to in the text in such a way that some or all of their content constitutes requirements of this document. For dated references, only the edition cited applies. For undated references, the latest edition of the referenced document (including any amendments) applies.

ISO 11135, *Sterilization of health-care products — Ethylene oxide — Requirements for the development, validation and routine control of a sterilization process for medical devices*

ISO 11137-1, *Sterilization of health care products — Radiation — Part 1: Requirements for development, validation and routine control of a sterilization process for medical devices*

ISO 11139,[1)] *Sterilization of health care products — Vocabulary — Terms used in sterilization and related equipment and process standards*

ISO 13408-1:2008, *Aseptic processing of health care products — Part 1: General requirements*

ISO 13408-1:2008/Amd. 1:2013, *Aseptic processing of health care products — Part 1: General requirements — Amendment 1*

ISO 13408-5, *Aseptic processing of health care products — Part 5: Sterilization in place*

ISO 13485, *Medical devices — Quality management systems — Requirements for regulatory purposes*

ISO 17665-1, *Sterilization of health care products — Moist heat — Part 1: Requirements for the development, validation and routine control of a sterilization process for medical devices*

1) Under preparation. Stage at the time of publication: ISO/DIS 11139:2017(E).

© ISO 2018 – All rights reserved

Copyright International Organization for Standardization
Provided by IHS Markit under license with ANSI
No reproduction or networking permitted without license from IHS
Licensee=Becton Dickinson - Loc 1-9, 11, 17, 21, 24, 29, ./5984713001, User=Chiu
Not for Resale, 02/10/2020 19:01:06 MST

3 Terms and definitions

For the purposes of this document, the terms and definitions given in ISO 11139 and the following apply.

ISO and IEC maintain terminological databases for use in standardization at the following addresses:

— IEC Electropedia: available at https://www.electropedia.org/

— ISO Online browsing platform: available at https://www.iso.org/obp

3.1
bacterial challenge test
technical operation performed to evaluate the capability of a *filter* (3.5) to retain organisms from liquid bacterial suspension under defined conditions

3.2
bioburden
population of viable *microorganisms* (3.9) on or in product and/or sterile barrier system

Note 1 to entry: For the purposes of this document, the definition of bioburden is the population of viable microorganisms in a *fluid* (3.6) prior to *sterilizing filtration* (3.11).

3.3
chemical compatibility
<filter> capability of process *fluids* (3.6) and *filter* (3.5) materials to be used together, under the specified process conditions, without adverse effects on either the fluids or filter materials

3.4
extractable
substance that can be released from a *filter* (3.5) or material using extraction solvents and/or extraction conditions that are expected to be at least as aggressive as the normal use conditions

[SOURCE: ISO 10993-12:2012, 3.8, modified — The wording has been modified.]

3.5
filter
construct of porous material through which a *fluid* (3.6) is passed to remove viable and/or non-viable particles

3.6
fluid
substance that continually deforms (flows) under applied shear force

EXAMPLE Liquid, gas, vapour or plasma.

Note 1 to entry: The filtrate of the fluid subjected to the *sterilizing filtration* (3.11) process might be the product to be produced, a part of the formulation, a gas used to provide overpressure or a process gas released into the aseptic processing area (e.g. gases released from air actuated valves).

3.7
filter integrity test
non-destructive physical test that can be correlated to the bacterial retention capability of a filter assembly

3.8
leachable
substance that can be released from a *filter* (3.5) or filter assembly during normal use conditions

3.9
microorganism
entity of microscopic size, encompassing bacteria, fungi, protozoa and viruses

Note 1 to entry: Viruses are not addressed in this document.

© ISO 2018 – All rights reserved
Copyright International Organization for Standardization
Provided by IHS Markit under license with ANSI
No reproduction or networking permitted without license from IHS
Licensee=Becton Dickinson - Loc 1-9, 11, 17, 21, 24, 29, ./5984713001, User=Chiu
Not for Resale, 02/10/2020 19:01:06 MST

3.10
pore size rating
nominal pore size of a *filter* (3.5) as claimed and stated in the labelling

Note 1 to entry: The pore size rating is determined by retention performance with a model particle. The pore size rating is not necessarily the physical diameter of the pores but is a rating based on the size of particles which might not pass through the filter.

3.11
sterilizing filtration
removal of viable *microorganisms* (3.9) from *fluids* (3.6) by passage of the fluid through a *filter* (3.5) under specified process conditions resulting in a sterile filtrate

4 Quality system elements

4.1 General

A quality management system as defined in ISO 13408-1:2008, Clause 4, and ISO 13408-1:2008/Amd. 1:2013 shall be implemented to ensure control over all activities affecting sterilizing filtration. Additionally the requirements in 4.2 and 4.3 shall apply.

4.2 Management responsibility

Operator training specific to filtration activities shall be implemented and documented for the following:

a) filtration procedures, modes of failure and needed precautions;

b) integrity test theory and practice;

c) failure investigation procedures and measures taken in case of integrity test deviations;

d) filter assembly procedure (including aseptic technique if required);

e) filter installation, cleaning and sterilization procedures.

4.3 Procurement of filters

4.3.1 Procedures for purchasing filters and filtration equipment shall be specified. These procedures shall conform with the applicable clauses of ISO 13485 or equivalent quality system.

4.3.2 There shall be a written agreement between the filter user and filter manufacturer that the filter manufacturer will notify the filter user of any changes in the filter manufacturing conditions with potential to affect the defined fluid and process parameters.

4.3.3 Procedures for identification and traceability of filters shall be specified. These procedures shall conform with the applicable clauses of ISO 13485 or equivalent quality system.

5 Sterilizing filter characterization

5.1 General

Sterilizing filter characterization is the process of determining which filters might be suitable for use as a sterilizing filter in a sterilizing filtration process for a given fluid. This is usually carried out by the filter user considering information available from the filter manufacturer.

© ISO 2018 – All rights reserved

Copyright International Organization for Standardization
Provided by IHS Markit under license with ANSI
No reproduction or networking permitted without license from IHS
Licensee=Becton Dickinson - Loc 1-9, 11, 17, 21, 24, 29, ./5984713001, User=Chiu
Not for Resale, 02/10/2020 19:01:06 MST

Sterilizing filter formats include, but are not limited to the following:

a) membrane filter discs for the user to assemble into filter holders/housings;

b) cartridge filters for the user to assemble into filter holders/housings;

c) units supplied pre-assembled by the filter manufacturer (capsules).

The specification for the filters used in production shall be justified against the specification of those used in the product and process validation.

5.2 Microbial removal effectiveness

5.2.1 Microbial removal effectiveness data shall be developed for each combination of sterilizing grade filter and fluid type. This is usually by demonstration of retention of a

a) product specific microbial challenge for liquid filtration, and

b) generic aerosol challenge for gas filtration.

5.2.2 The variables that affect the effectiveness of the microbial removal and the interactions of these variables in relation to this effectiveness shall be identified. Such variables include, but are not limited to the following:

a) filter membrane characteristics, such as the pore size distribution, surface chemistry, structure and polymer type of the membrane (see 8.2.1);

b) filtration equipment characteristics (see 6.4);

c) fluid characteristics, such as the effects of surfactants or additives; including the absorptive influence of the fluid on microorganisms, pH, viscosity, osmolarity, surface tension and ionic strength (see 7.1.2);

d) fluid bioburden; number, type and cell size of organisms present in the fluid and process conditions or formulations which might affect cell size (see 7.1.2);

e) process conditions, such as batch size, temperature, differential pressure, flow rate, hold times and processing times (see 8.3.1);

f) the effect of the sterilization process for the filter on the filter performance.

For the sterilization of gases by filtration, some of the above may not be applicable.

5.3 Material effects

5.3.1 The effects of materials extracted or leached from the filter on the fluids being filtered shall be evaluated (see 8.2.2.2 and 8.2.2.3).

5.3.2 The effects of adsorption of product or product components onto the filter material shall be evaluated (see 8.2.2.4).

5.3.3 Filters shall not be fibre-releasing.

NOTE A fibre is generally considered to be a particle having an aspect (length-to-width) ratio of 10 or more.

5.3.4 Where filters are reused, the processes for disassembly, cleaning, rinsing, storage, reassembly, flushing and sterilization shall be justified. The effects of these processes on microbial removal effectiveness and filter materials shall be evaluated (for further details see 8.2.3.2).

© ISO 2018 – All rights reserved

Copyright International Organization for Standardization
Provided by IHS Markit under license with ANSI
No reproduction or networking permitted without license from IHS

Licensee=Becton Dickinson - Loc 1-9, 11, 17, 21, 24, 29, ./5984713001, User=Chiu
Not for Resale, 02/10/2020 19:01:06 MST

5.4 Environmental considerations

Procedures for the disposal of used filter material shall take into consideration the materials filtered and shall ensure safe disposal.

NOTE Local waste disposal requirements can apply.

6 Process and equipment characterization

6.1 General

The purpose of this activity is to define the entire sterilizing filtration process so that it is both safe and reproducible.

6.2 Risk management

6.2.1 The following additional requirements to ISO 13408-1:2008, 5.2, and ISO 13408-1:2008/Amd. 1:2013 concerning risk management apply.

6.2.2 A risk assessment shall be performed during the selection of the filter and filtration equipment. The risk assessment shall include, but is not limited to the following:

a) effects of variables identified in 5.2.2;

b) the design of the sterilizing filtration system in terms of the incorporation of, and location within the system of particulate reduction or bioburden reduction filters, single or sterilizing filters in series, redundant sterilizing grade filters or parallel sterilizing grade filters;

c) the risk to the sterility of the filtration system when pre-use post-sterilization integrity testing (PUPSIT) is carried out;

d) the risks associated with filter reuse for the sterilizing filtration process for a given fluid.

6.2.3 Risk management shall include assessment and management of risks associated with the outsourcing of sterilization of critical sterile components, for example, where filters are purchased sterile.

For single use filtration systems this shall include an evaluation of the following:

a) the supplier's assembly design (including the filter user's need for single, serial, redundant or parallel filter design), materials of construction, manufacturing and sterilization processes;

b) filter location, i.e. inside or outside of an isolator;

c) the ability to conduct a pre-use post-sterilization integrity test (if required);

d) how the assembly performs in the filtration process for the fluid, including requirements for filter flushing or wetting;

e) maintenance of downstream sterility;

f) integrity testing of closed systems;

g) how the assembly impacts the filtered fluid.

6.2.4 The estimation of risk by quantitative methods and the verification of effectiveness of risk mitigation procedures shall be determined. Methods might include microbiological and particulate monitoring of the fluid.

© ISO 2018 – All rights reserved

Copyright International Organization for Standardization
Provided by IHS Markit under license with ANSI
No reproduction or networking permitted without license from IHS
Licensee=Becton Dickinson - Loc 1-9, 11, 17, 21, 24, 29, ./5984713001, User=Chiu
Not for Resale, 02/10/2020 19:01:06 MST

6.2.5 The outcome of the risk assessment shall be used in the design of the sterilizing filtration validation study.

6.2.6 Risk management shall be applied iteratively. The risk assessment shall be updated as necessary if the sterilizing filtration process changes during development and validation.

6.3 Process characterization

6.3.1 The process parameters and their tolerances shall be specified. These tolerances shall be based upon knowledge of the combination of process parameters yielding minimal acceptable microbial removal effectiveness. Processing within such process parameters shall routinely yield safe and functional sterile filtrate.

The establishment of tolerances for process parameters shall be based upon analyses of process variables (see Clause 8).

6.3.2 Means of controlling and monitoring the process variables shall be determined.

6.3.3 Any treatment of fluid that is required prior to exposure to the sterilizing filter to ensure effectiveness of the sterilizing filtration process shall be specified (for example, the use of a bioburden reduction filter).

6.3.4 Following sterilizing filtration subsequent aseptic handling of sterile filtrate shall be as specified in ISO 13408-1.

6.4 Equipment characterization

6.4.1 The equipment to deliver the process in a safe manner within the parameters stipulated for the process variables shall be specified.

6.4.2 The specification shall include, but is not limited to a physical description of the equipment and necessary ancillary items, including materials of construction.

6.4.3 The selection of components for the filtration system and their interconnection and arrangement within the filtration system shall be documented and justified.

The filtration system components shall not impart impurities to or otherwise alter the quality of the fluid. Such components can include the following:

a) piping systems and connections;

b) valves;

c) gauges and/or other instruments;

d) gaskets, O-rings and/or packings;

e) filter materials.

6.4.4 In gas filtration, unintended wetting of the filter or accumulation of liquid in the filter equipment shall be avoided.

6.4.5 The filtration system shall be designed in accordance with the following requirements.

a) To allow operation within validated process parameters.

© ISO 2018 – All rights reserved
Copyright International Organization for Standardization
Provided by IHS Markit under license with ANSI
No reproduction or networking permitted without license from IHS
Licensee=Becton Dickinson - Loc 1-9, 11, 17, 21, 24, 29, ./5984713001, User=Chiu
Not for Resale, 02/10/2020 19:01:06 MST

b) To maintain the sterility of the filtrate (see ISO 13408-1:2008, Clause 6, and ISO 13408-1:2008/Amd. 1:2013).

c) To ensure that sterilizing filter placement is based on risk assessment.

To minimize the risk of recontamination post-filtration, simple downstream systems containing minimal joints and gaskets are preferred. Locating the sterilizing filter as close as possible to the filling equipment or delivery system might also reduce recontamination risk.

d) To ensure that the sterilizing filtration process does not present an unacceptable risk of contamination of the surrounding environment.

e) To allow cleaning procedures to be conducted as necessary.

f) To allow sterilization of the filter material and all components or surfaces that contact fluid post filtration.

NOTE Approaches to sterilization can include

1) sterilization of the filtration system in place,

2) sterilization of the filtration assembly by the filter user followed by aseptic assembly of the filtration system, or

3) purchase of sterilized components from approved suppliers.

g) To permit in-place integrity testing as a closed system post sterilization and prior to fluid filtration where pre-use–post-sterilization integrity test (PUPSIT) is indicated.

h) To describe the instrumentation for monitoring and controlling the filtration process, including sensor characteristics and locations, and indicating and recording instruments.

i) To describe faults recognized by the filtration equipment.

j) To list safety features, including those for personnel and environmental protection.

6.4.6 Software used to control and/or monitor the process shall be prepared in accordance with a quality management system that provides documented evidence that the software meets its design intention.

NOTE Attention is drawn to ISO/IEC 90003.

7 Fluid definition

7.1 General

7.1.1 The purpose of this activity is to define the fluid to be sterilized. This activity should be considered as part of the product risk assessment (see ISO 13408-1).

NOTE The term “fluid” is used here in place of the term “product”. Product is generally considered to be the filtrate post-sterilization or the finished product post aseptic processing. Thus, the definition describes the characteristics of the fluid to be sterilized which either affect the filtration process or which need to be retained in the filtrate.

7.1.2 The following attributes of the fluid to be sterilized shall be specified and maintained within defined limits where applicable:

a) formulation;

b) pH;

© ISO 2018 – All rights reserved

Copyright International Organization for Standardization
Provided by IHS Markit under license with ANSI
No reproduction or networking permitted without license from IHS
Licensee=Becton Dickinson - Loc 1-9, 11, 17, 21, 24, 29, ./5984713001, User=Chiu
Not for Resale, 02/10/2020 19:01:06 MST

c) osmolarity;

d) ionic strength;

e) viscosity;

f) density;

g) surface tension;

h) bioburden;

i) particulates.

NOTE The intention is that the pre-sterilizing filtration bioburden is controlled and maintained at a level substantially below the validated retention performance of the filtration system.

7.1.3 Risks associated with compounds that might migrate from the filter to the process stream including extractables, leachables, particulates and endotoxin shall be evaluated.

7.1.4 The potential for the formulation of the fluid or the nature of the filter to affect the cell size of microorganisms that might allow passage of bioburden microorganisms through the sterilizing grade filter shall be considered.

7.1.5 It shall be confirmed that the filtrate meets specified requirements for safety, quality and performance following the application of the defined sterilizing filtration process at the most challenging process parameters for the fluid.

7.1.6 If multiple filtration cycles are permitted, the effects of such processing on the fluid shall be evaluated.

7.2 Microbiological quality

7.2.1 A system shall be specified and maintained to ensure that the bioburden of the fluid to be sterilized is controlled and does not compromise the effectiveness of the sterilizing filtration process [see 5.2.2 d), 7.1.2 h), 7.1.4, 7.2.2, 8.2.3.1, 8.2.3.2].

7.2.2 Methods for bioburden determination shall be appropriate for their intended purpose, validated and documented.

NOTE Some guidance can be found in ISO 11737-1 and Pharmacopoeia procedures such as “Microbiological examination of non-sterile products: Microbial enumeration tests” shown in the European Pharmacopoeia (Ph. Eur.), Japanese Pharmacopoeia (JP) and United States Pharmacopoeia (USP).

8 Process definition

8.1 General

8.1.1 The purpose of this activity is to define a detailed specification for the sterilizing filtration process to be applied to a defined product (see Clause 7). This shall be achieved by the following:

a) selecting the most appropriate filter (see Clause 5);

b) selecting the process parameters which consistently achieve a sterile filtrate without compromising the safety, quality and performance of the product (see 5.2.2);

c) selection of a sterilization method for the filtration system [see 6.4.5 f)].

© ISO 2018 – All rights reserved
Copyright International Organization for Standardization
Provided by IHS Markit under license with ANSI
No reproduction or networking permitted without license from IHS
Licensee=Becton Dickinson - Loc 1-9, 11, 17, 21, 24, 29, ./5984713001, User=Chiu
Not for Resale, 02/10/2020 19:01:06 MST

8.1.2 The routine process for filtration shall be defined and documented in a written procedure.

8.2 Filter definition and characterization

8.2.1 General

The filter user shall document a justification for the size and type of filters used in the filtration system that takes into account the fluid to be filtered and the process used for filtration. This shall include the following:

a) effective filter surface area required for desired flow rate;

b) filter pore size rating;

c) thermal compatibility of filter materials with process and/or sterilization temperatures;

d) hydraulic strength to withstand process differential pressure;

e) filter configuration (plate vs cartridge), redundant filters, serial filters, parallel filters;

f) filter longevity;

g) fluid bioburden [see 5.2.2 d)].

8.2.2 Compatibility between the filter and fluid

8.2.2.1 The filter user shall demonstrate compatibility between the filter and fluid. Compatibility studies shall include

a) the effects of the formulation and process conditions on the chemical and physical attributes and performance of the filter, and

b) the effects of the filter and process conditions on the relevant biological, chemical and physical attributes of the fluid.

Evaluation shall include extractables and leachables, particulates and adsorption.

8.2.2.2 For leachables, the identity and quantity of material leachable from the filter shall be determined using the process fluid and the same filter type as that used for production. Where it is not possible to use the process fluid a surrogate may be used. Fluids with similar properties may be grouped and a worst case representative selected for testing. Where a surrogate fluid or grouping approach is used, the rationale shall be documented.

NOTE Flushing filters prior to use can reduce the levels of potential leachables.

8.2.2.3 For extractables, studies shall be carried out to demonstrate absence of any relevant toxicity from substances extractable from the filter.

NOTE Extractables data and chemical compatibility tables are generally available from the filter manufacturer and are commonly used as a starting point to determine whether further testing is required.

8.2.2.4 The effects of adsorption of process fluid components onto the filter material on the process fluid composition and concentration shall be evaluated.

NOTE Adsorption is a mechanism of process fluid components binding to the filter material that might affect the composition of the filtrate. Flow rate, concentration of components, contact time, temperature and pH are some factors that can affect adsorption.

© ISO 2018 – All rights reserved

Copyright International Organization for Standardization
Provided by IHS Markit under license with ANSI
No reproduction or networking permitted without license from IHS
Licensee=Becton Dickinson - Loc 1-9, 11, 17, 21, 24, 29, ./5984713001, User=Chiu
Not for Resale, 02/10/2020 19:01:06 MST

8.2.3 Filter use

8.2.3.1 If reduction of bioburden is necessary prior to sterilizing filtration, use of a pre-filter prior to the sterilizing filter shall be considered.

NOTE The criteria in 8.2.2.1 to 8.2.2.3, as applicable, can also be applied to pre-filters in view of their intended use.

8.2.3.2 A sterilizing grade filter that is to be reused shall be subject to the requirements as specified in 8.2, 8.3 and Clause 9.

Where a sterilizing grade filter is to be reused, the filter user shall:

a) assess and document the risks associated with filter reuse for the sterilizing filtration process for a given fluid [see 6.2.1 d)];

b) conduct and document effective validation and qualification studies to demonstrate that filter reuse for a given sterilizing filtration process and for a given fluid does not compromise performance of the sterilizing filter or filtrate quality (see Clause 9);

c) document the maximum number of reuse cycles validated and permitted for the filter and implement controls to ensure that filters are not reused beyond the validated maximum number of cycles; records of these controls shall be maintained;

d) implement controls to ensure that filters contaminated with fluid or cleaning agent residues, or considered defective in any other way, shall not be used to process subsequent batches; records of these controls shall be maintained.

8.3 Filtration process definition

8.3.1 Process parameters shall be established, qualified and documented. These include the following:

a) monitoring of variables such as temperature, pressure, flowrate, total volume and duration to ensure that process parameters remain within specified tolerances;

b) sterilization procedures for the filter assembly, filtration system and fluid path, including the permissible limit for cumulative sterilization time and/or number of cycles at applicable sterilization conditions in case of multiple sterilizations and re-use (see 8.2.3.2);

c) filter configuration and set-up;

d) filtration process conditions and their tolerances:

   1) fluid pre-filtration holding time and effect on bioburden;

   2) filter conditioning with fluid, if necessary;

   3) filter flushing with fluid;

   4) filtration time/total time filter is in contact with fluid;

   5) maximum number of reuses for sterilizing filters;

   6) flowrate;

   7) filtration volume;

   8) temperature;

   9) differential pressure;

e) cleaning procedures for the filtration system post-use.

--`,,```,,,,`,,`,`,,`,`,,`,`,`-`-`,,`,,`,`,,`---
© ISO 2018 – All rights reserved
Copyright International Organization for Standardization
Provided by IHS Markit under license with ANSI
No reproduction or networking permitted without license from IHS
Licensee=Becton Dickinson - Loc 1-9, 11, 17, 21, 24, 29, ./5984713001, User=Chiu
Not for Resale, 02/10/2020 19:01:06 MST

NOTE 1 Information from the filter manufacturer can be useful in designing and validating a flushing procedure.

NOTE 2 Total organic carbon (TOC) test or protein specific assays can be useful in determining minimum flush volumes.

8.3.2 The written procedures shall include processing requirements as applicable for the following:

a) inspection of filtration system components;

b) assembly of the filtration system;

c) cleaning, sterilization and/or flushing;

d) time between cleaning and sterilization (if applicable);

e) time between sterilization and use;

f) control testing including integrity testing;

g) monitoring of parameters for temperature, differential pressure, flowrate;

h) time between fluid filtration and cleaning, etc.

8.3.3 Written integrity test procedures shall be established, including acceptance criteria and methods of failure investigation and conditions under which the filter integrity test can be repeated (see 8.4).

8.3.4 Procedures shall be in place to minimize the number of microorganisms prior to sterile filtration, thus minimizing the challenge to the sterilizing filter.

8.4 Integrity testing process definition

8.4.1 A sterilizing grade filter that is used to sterilize a fluid shall be subject to a non-destructive integrity test post use and without removal of the filter from its housing. Test results shall correlate to the microbial retention capability of the filter established during validation.

8.4.2 The integrity of the filtration system prior to use is critical to ensure product sterility. Damage to filters, for example in transit or during sterilization, or inadequate fitting of filter cartridges to housings, if undetected would result in product rejection in the event of post use integrity test failure. Therefore consideration should be given to carrying out integrity testing pre- and post-filtration. The decision to omit the pre-use test, shall be based on the result of a risk assessment and documented.

The following points shall be considered for integrity testing of the sterile filter before use:

a) integrity testing shall not compromise the sterility of the sterilized filter or the downstream process;

b) compatibility of the integrity test fluid with the process fluid.

8.4.3 If the process has been validated as a serial or parallel filtration system to achieve the sterility for a given fluid, the filtration system is considered to be a single sterilizing unit and all sterilizing grade filters within the system shall satisfactorily pass integrity testing after use.

8.4.4 In a redundant filtration system, a risk assessment shall be carried out to determine the acceptability of performance of a post-use integrity test on the secondary filter in the event of failure of the post-use integrity test on the primary filter. This shall be carried out as part of the integrity test process definition and not following an integrity test failure. In a redundant filtration system, if the post-use integrity test of the primary sterilizing filter passes, then the post-use integrity test on the secondary (redundant) filter is not necessary.

© ISO 2018 – All rights reserved

Copyright International Organization for Standardization
Provided by IHS Markit under license with ANSI
No reproduction or networking permitted without license from IHS
Licensee=Becton Dickinson - Loc 1-9, 11, 17, 21, 24, 29, ./5984713001, User=Chiu
Not for Resale, 02/10/2020 19:01:06 MST

8.4.5 Where gas filters are in place for extended periods such as vent filters, integrity testing shall be carried out pre- and post-use. Duration of use shall be specified depending on hold time, use time (duration), number of processes (sterilization), flow of fluid (volume, rate), etc.

8.4.6 Written integrity test procedures shall be established, including acceptance criteria and methods of failure investigation and conditions under which the filter integrity test can be repeated.

9 Validation

9.1 General

The purpose of validation is to demonstrate that the filtration process established in the process definition (see 8.3) can be delivered effectively and reproducibly to achieve a sterile filtrate. Validation consists of a number of identified stages.

For the validation of sterilization of liquids by filtration (see 9.2 to 9.5):

a) fluid specific microbial retention (i.e. sterilization capability of filter medium);

b) determination of fluid specific integrity test parameters related to 9.1 a);

c) filter medium interactions;

d) sterilization of the filtration system.

For the validation of the sterilization of gases (see 9.6):

e) demonstration of retention of a standard aerosol challenge under specified conditions;

f) determination of integrity test parameters;

g) sterilization of the filtration system.

9.2 Validation of fluid-specific microbial retention by sterilizing filters for liquids

9.2.1 General

9.2.1.1 Liquid-sterilizing filtration shall be validated during initial process qualification by an appropriate bacterial challenge test using at least one filter from each of not less than three lots of filters with three consecutive successful outcomes. All failures shall be investigated.

NOTE 1 This testing is usually performed in a scaled-down model system (which can include a different cartridge or disc size incorporating the same filter medium) in a laboratory environment to avoid jeopardizing the quality of the manufacturing environment.

NOTE 2 Information from the filter manufacturer can be useful in designing and validating integrity test procedure(s).

NOTE 3 Typically, filter manufacturers publish test methods and results used to qualify filters for sterilizing filtration applications. This documentation supports, but does not replace performance qualification studies of liquid filtration undertaken by the filter user.

9.2.1.2 To represent the worst case of a least retentive membrane, at least one lot of membranes used in the bacterial challenge test shall have a pre-use physical integrity test value that is either at or near the filter manufacturer's acceptance specification.

9.2.1.3 The selection of the challenge conditions to simulate worst-case production conditions shall take into account the attributes described in 8.3.1 d).

© ISO 2018 – All rights reserved
Copyright International Organization for Standardization
Provided by IHS Markit under license with ANSI
No reproduction or networking permitted without license from IHS
Licensee=Becton Dickinson - Loc 1-9, 11, 17, 21, 24, 29, ./5984713001, User=Chiu
Not for Resale, 02/10/2020 19:01:06 MST

9.2.1.4 Liquids with similar properties may be grouped and worst case representatives used for bacteria retention studies. Justification for grouping fluids and selection of worst case representatives shall be documented.

9.2.1.5 The testing fluid for the bacterial challenge test shall be the fluid to be filtered. The viability of the challenge organism in the fluid over the worst case test time shall be assessed. If the fluid to be filtered cannot be used due to antimicrobial or other properties, a simulation fluid or a change in simulation conditions shall be used. In determining the simulation conditions, the following shall be considered:

a) modifying the fluid to be filtered e.g. reducing or eliminating the antimicrobial compound and/or adjusting pH;

b) the simulation fluid shall mimic as closely as possible the fluid formulation and the following characteristics: pH, viscosity, ionic strength, osmolarity, surface activity/tension, density, and the effects of the fluid on the challenge organisms;

c) reducing fluid-organism exposure time;

d) reducing the fluid temperature during the challenge after exposing the filter to the fluid at process temperature;

e) using a diminutive organism that is resistant to the antimicrobial properties of the fluid or process;

f) exposing the filter to the fluid with the process fluid contact time, followed by a challenge in a modification of fluid as in 9.2.1.5 a) or b).

9.2.2 Test organism

9.2.2.1 Indigenous bioburden of the fluid to be filter sterilized shall be determined (see also 7.2).

9.2.2.2 If the fluid does not contain organisms smaller than *Brevundimonas diminuta*, the challenge organism for an 0,2 µm sterilizing filter shall be *Brevundimonas diminuta* (i.e. ATCC 19146).

9.2.2.3 If there is concern that the indigenous bioburden might include microorganisms that are smaller than *Brevundimonas diminuta*, or small enough to challenge the retention capability of the sterilizing grade filter, then a suitable challenge microorganism (other than *B. diminuta*) shall be selected for use. The cultivation conditions shall be qualified to yield cells of small size. The effect of the fluid on the cell size shall be evaluated.

NOTE Factors of potential concern can include the following:

a) presence of material with the potential to affect the passage of microorganism through the filter membrane (e.g. liposome);

b) presence of microorganisms known to penetrate filters;

c) presence of pleomorphic organisms (e.g. L forms in penicillin solution, Mycoplasmas, Leptospiras).

9.2.2.4 Where it is not possible to use *Brevundimonas diminuta* and where microorganisms with the potential to penetrate the filter have not been identified, the user shall justify the choice of alternative challenge microorganism. Where alternative microorganisms are cultivated as challenge organisms, cultivation conditions shall be chosen appropriately to yield cells of a small size.

9.2.2.5 The minimum challenge level shall be 1×10^7 colony-forming units per square centimetre (CFU/cm^2) of effective filter surface area.

9.2.2.6 Where a 0,1 µm sterilizing filter is selected to prevent the passage of Mycoplasma or other organisms smaller than *Brevundimonas diminuta* the challenge organism may be *Acholeplasma laidlawii*

© ISO 2018 – All rights reserved

Copyright International Organization for Standardization
Provided by IHS Markit under license with ANSI
No reproduction or networking permitted without license from IHS
Licensee=Becton Dickinson - Loc 1-9, 11, 17, 21, 24, 29, ./5984713001, User=Chiu
Not for Resale, 02/10/2020 19:01:06 MST

(ATCC 23206) or similar[9]. The minimum challenge level shall be 1 × 10^7 colony-forming units per square centimetre (CFU/cm^2) of effective filter surface area.

If the 0,1 µm sterilizing filter is used only to remove organisms which are equal to or bigger than *Brevundimonas diminuta* refer to 9.2.2.2 to 9.2.2.5.

9.2.2.7 Validation of the microbial aspects of the challenge test shall ensure that the following:

a) the challenge organisms are dispersed in a volume of the fluid where the total filtered volume is representative of the production batch size and effective filtration area, unless antimicrobial properties require a different approach;

NOTE 1 This might require recirculation of the fluid when the challenge test is carried out in a scaled down system.

b) the viable count of the challenge suspension is determined on an appropriate number of samples taken throughout the test duration to demonstrate that the intended challenge is delivered and remains consistent and viable for the duration of the test;

c) the validation challenge is conducted under conditions that simulate the worst case conditions permitted in routine processing;

d) the test organism as prepared is of a diminutive size;

NOTE 2 This can be achieved by the use of a positive control to demonstrate passage of the challenge organism, for example, passage of *B. diminuta* through a 0,45 µm rated membrane or passage of *A. laidlawii* through a 0,2 µm rated membrane.

e) the test method is capable of recovering small numbers of the test organism.

9.2.2.8 The acceptance criteria shall include a requirement that there shall be no passage of the challenge organism through the three test filters. In each test the positive control shall be valid.

9.2.2.9 Retention data from the bacterial challenge test shall be used to establish minimum integrity test specifications for a production filter.

NOTE 1 Where validation establishes a reproducible relationship between the fluid-specific bacterial retention capability of a sterilizing grade filter and the physical integrity of that filter, then suitable non-destructive pre-use and post-use filter integrity tests are used to determine whether a full-scale production filtration process has been conducted successfully (see 8.4).

NOTE 2 These specifications are used to determine if a production filtration process has been carried out successfully as bacterial challenge testing is a destructive test that is not practical for production filters.

9.2.2.10 The filter user shall establish routine processing conditions which lie within the parameters demonstrated to achieve a sterile filtrate during validation.

9.3 Validation of the integrity test for sterilizing filters for liquids

The wetting fluid for the filter integrity testing shall be selected based on either the filter manufacturer's recommended standard wetting fluids (such as water and isopropyl alcohol solutions) or fluid to be filtered (such as drug product, intermediates and buffer solutions). When the latter is selected, an appropriate test specification shall be determined and qualified.

The fluid to be filtered should be used for integrity testing where

a) residuals of the standard wetting fluid have an adverse effect on the fluid to be filtered or the process,

b) use of standard wetting fluid might introduce a risk to the sterility of the filtration process, and

© ISO 2018 – All rights reserved
Copyright International Organization for Standardization
Provided by IHS Markit under license with ANSI
No reproduction or networking permitted without license from IHS
Licensee=Becton Dickinson - Loc 1-9, 11, 17, 21, 24, 29, ./5984713001, User=Chiu
Not for Resale, 02/10/2020 19:01:06 MST

c) an extended flushing operation with standard wetting fluid is needed to replace the fluid in the filter.

9.4 Validation of filter interactions with the process fluid

The following shall be qualified:

a) leachables (see 8.2.2.2);

b) extractables (see 8.2.2.3);

c) materials removed from the process stream by absorbtion (see 8.2.2.4).

9.5 Validation of the sterilization of filter system

9.5.1 The filter user shall demonstrate that

a) the sterilization process is effective at minimal exposure conditions, and

b) maximum exposure conditions do not adversely affect the filter system.

9.5.2 Sterilization processes shall be validated in accordance with the principles of ISO 13408-5, ISO 17665-1, ISO 11135 or ISO 11137-1.

NOTE Typical sterilization processes used for filtration systems are steam-in-place (SIP) or steam autoclave sterilization by the user, and ethylene oxide or irradiation by the manufacturer where filters or filtration systems are supplied sterilized.

9.6 Validation of fluid-specific microbial retention by sterilizing filters for gases

9.6.1 General

Sterilizing filtration of gases is typically validated by the use of aerosol challenges. There is little evidence of the influence of carrier gas on the sterile filtration process. For this reason, a process- and gas-specific bacterial retention test is generally not required.

NOTE Typically, filter manufacturers publish test methods and results used to qualify filters for sterilizing filtration applications.

9.6.2 Aerosol retention

The filter manufacturer's retention data shall be evaluated to ensure its applicability to the specified process.

9.6.3 Validation of physical integrity testing

9.6.3.1 The manufacturer's qualification data shall be evaluated to ensure applicability to the specified process.

9.6.3.2 The physical integrity test shall be correlated to the retention capability of the filter.

NOTE Integrity test data are published in the filter manufacturer's validation guide.

9.6.3.3 Traditional approaches used to test hydrophilic filter elements can be used for hydrophobic filter membranes. The wetting fluid for the filter integrity test shall be selected based on the filter manufacturer's recommended standard wetting fluids (such as isopropyl or tertiary butyl alcohol solutions). The wetting fluid and the gas used shall be specified and the test shall be performed at temperatures recommended by the filter manufacturer. Alternatively a water intrusion test can be appropriate. In certain applications, an aerosol integrity test might be used.

© ISO 2018 – All rights reserved

Copyright International Organization for Standardization
Provided by IHS Markit under license with ANSI
No reproduction or networking permitted without license from IHS
Licensee=Becton Dickinson - Loc 1-9, 11, 17, 21, 24, 29, ./5984713001, User=Chiu
Not for Resale, 02/10/2020 19:01:06 MST

9.6.4 Compatibility and service life

Compatibility of the filter under actual use conditions shall be demonstrated by integrity testing the filter before and after exposure to the conditions of use.

Data shall be generated to demonstrate that filter integrity is maintained for the duration of use.

NOTE In most applications, filters are used continuously or reused multiple times after sterilization.

9.6.5 Validation of the sterilization of the filter system for gases

See 9.5.

10 Routine monitoring and control

10.1 The purpose of routine monitoring and control is to demonstrate that the validated and specified sterilizing filtration process has been delivered to the fluid.

10.2 There shall be evidence through measurements that the sterilizing filtration process was delivered within the defined tolerances.

10.3 Data shall be recorded to demonstrate the attainment of process parameters within defined tolerances.

10.4 All records shall be retained in accordance with ISO 13485 or equivalent quality system.

10.5 Pre-filtration bioburden shall be determined for each batch, unless it can be justified that bioburden consistently lies within acceptable limits.

10.6 Where required, pre-filtration particulate contaminants (levels) shall be determined for each batch, unless all aspects of manufacture are well controlled and previous test results have shown particulate levels to consistently lie within acceptable limits.

10.7 The validated physical integrity test of a sterilizing filter shall be conducted after each use without disturbing the filter in its housing.

11 Product release from sterilizing filtration

11.1 A procedure for product release from sterilizing filtration shall be specified. This procedure shall define the criteria for designating the sterilizing filtration process as conforming to its specification.

11.2 All filtration process parameters deemed to be critical shall be documented. The documentation shall become part of a batch record.

11.3 Filtration records shall include the following, where applicable:

a) dates of fluid preparation and filtration;

b) name and batch number of the fluid;

c) operator's name(s);

d) filter manufacturer, filter type and filter manufacturer's lot and/or serial number(s);

e) cleaning of filtration system;

© ISO 2018 – All rights reserved
Copyright International Organization for Standardization
Provided by IHS Markit under license with ANSI
No reproduction or networking permitted without license from IHS
Licensee=Becton Dickinson - Loc 1-9, 11, 17, 21, 24, 29, ./5984713001, User=Chiu
Not for Resale, 02/10/2020 19:01:06 MST

f) sterilization conditions for the filtration system;

g) reference to sterilization cycles used for components employed in the filtration process;

h) number of reuse cycles;

i) filtration process conditions (for example, differential pressure, upstream pressure, downstream pressure, flowrate, operation temperature, time, etc.);

j) filter integrity test result and assessment;

k) results of pre-sterilization bioburden testing;

l) deviations to written procedures;

m) name of the person approving the sterilizing filtration process.

11.4 If the records specified in 11.3 are not available, the product shall be considered as non-conforming and handled in accordance with documented procedures (see ISO 13485).

12 Maintaining process effectiveness

12.1 General

The continued effectiveness of the system for ensuring the condition of fluid presented for sterilizing filtration shall be demonstrated.

12.2 Recalibration

The accuracy and reliability of the instrumentation used to control, indicate, or record the sterilizing filtration process shall be verified periodically in accordance with ISO 13408-1:2008, 4.3.2, and ISO 13408-1:2008/Amd. 1:2013.

12.3 Maintenance of equipment

12.3.1 Preventative maintenance shall be planned and performed in accordance with documented procedures. The procedure for each planned maintenance task and the frequency at which it is to be carried out shall be specified. Records of maintenance shall be retained in accordance with ISO 13408-1:2008, 4.1.4, and ISO 13408-1:2008/Amd. 1:2013.

12.3.2 Equipment shall not be used to process product until specified maintenance tasks have been satisfactorily completed and recorded.

12.3.3 The maintenance scheme, maintenance procedures and maintenance records shall be reviewed periodically by a designated person. The results of the review shall be recorded in accordance with ISO 13408-1:2008, 4.1.4, and ISO 13408-1:2008/Amd. 1:2013.

12.4 Requalification

12.4.1 The extent to which requalification is carried out shall be justified.

12.4.2 The process history shall be reviewed at defined intervals to determine if requalification is necessary.

12.4.3 Requalification requirements shall be considered as part of individual change assessments and following maintenance.

© ISO 2018 – All rights reserved

Copyright International Organization for Standardization
Provided by IHS Markit under license with ANSI
No reproduction or networking permitted without license from IHS
Licensee=Becton Dickinson - Loc 1-9, 11, 17, 21, 24, 29, ./5984713001, User=Chiu
Not for Resale, 02/10/2020 19:01:06 MST

12.4.4 Requalification procedures shall be specified and records of requalification retained.

12.4.5 Requalification data shall be reviewed against the specified acceptance criteria in accordance with documented procedures. Records shall be retained of reviews of requalification together with corrections made and corrective actions taken.

12.5 Assessment of change

Any change shall be assessed for its impact on the effectiveness of the sterilizing filtration process. Changes to be considered (if applicable) shall include the following:

a) replacement of a part of the filtration system which could cause a process parameter change;

b) any change to the formulation of the fluid being filtered;

c) any change in the bioburden of the fluid being filtered;

d) any change to the sterilizing filter;

e) any change in filter manufacturing conditions as reported by the filter manufacturer shall be evaluated with respect to their potential to affect the defined fluid and process parameters (see 4.3.2);

f) any change to the process parameters;

g) new or modified software or hardware.

The outcome of this assessment, including the rationale for the decisions reached and the extent of the changes made to the sterilizing filtration process, or requalification requirements shall be documented.

© ISO 2018 – All rights reserved
Copyright International Organization for Standardization
Provided by IHS Markit under license with ANSI
No reproduction or networking permitted without license from IHS
Licensee=Becton Dickinson - Loc 1-9, 11, 17, 21, 24, 29, ./5984713001, User=Chiu
Not for Resale, 02/10/2020 19:01:06 MST

Annex A
(informative)

Guidance on the application of this document

NOTE For ease of reference, the numbering of clauses in this annex corresponds to that in the main body of this document.

A.1 General

The guidance given in this annex is not intended as a checklist for assessing conformity with this document. This guidance is intended to assist in obtaining a uniform understanding and implementation of this document by providing explanations and acceptable methods for achieving conformity with specified requirements. It highlights important aspects and provides examples. Methods other than those given in the guidance may be used, providing their performance conforms with this document.

A.2 Note on normative references

See Clause 2.

A.3 Note on terms and definitions

Figure A.1 is provided to demonstrate the common terminology for the elements of a sterilizing filter.

The filter material (1) is the membrane/matrix which removes the microorganisms from the process fluid. This filter material can be manufactured onto a supporting unit (2) by the filter manufacturer to produce a filter cartridge (4). The filter cartridge is then fitted into a filter housing (6) by the user and sterilized. The cartridge in the housing is often referred to as a filter assembly (7).

Alternatively the filter material can be manufactured into a capsular supporting unit (3) to produce a pre-assembled filter capsule (5) which can be supplied to the user sterile or non-sterile.

The filter assembly with its associated valves, gauges, etc., is referred to as the filtration system (8).

© ISO 2018 – All rights reserved

Copyright International Organization for Standardization
Provided by IHS Markit under license with ANSI
No reproduction or networking permitted without license from IHS
Licensee=Becton Dickinson - Loc 1-9, 11, 17, 21, 24, 29, ./5984713001, User=Chiu
Not for Resale, 02/10/2020 19:01:06 MST

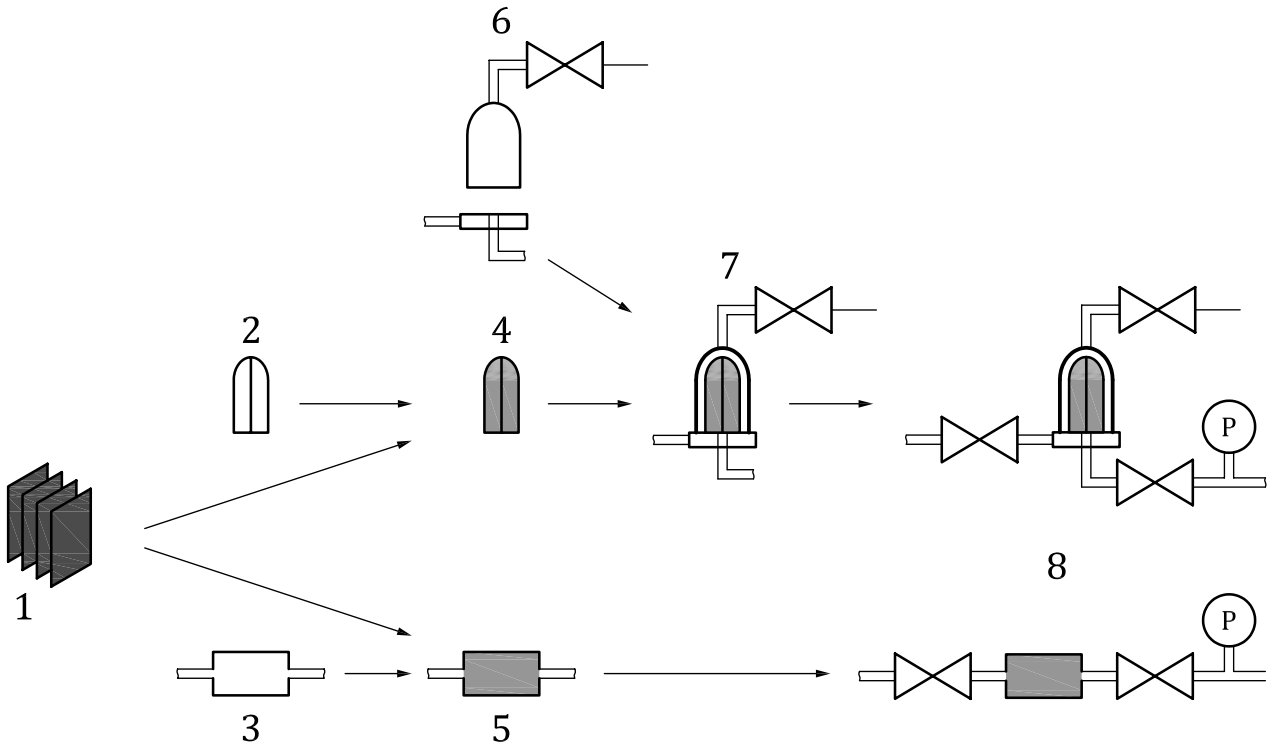

Key

1	filter material	5	filter capsule
2	supporting unit for filter cartridge	6	filter housing
3	supporting unit for filter capsule	7	filter assembly
4	filter cartridge	8	filtration system

Figure A.1 — Pictorial aide to filter terminology

A.4 Quality system elements

A.4.1 General

No guidance is offered.

A.4.2 Management responsibility

No guidance is offered.

A.4.3 Procurement of filters

NOTE The clause refers to the requirements for the purchasing of filters and filtration equipment to be used for product realization. Purchasing controls for starting materials for products to be processed by sterilizing filtration are covered in ISO 13408-1.

A.4.3.1 No guidance is offered.

A.4.3.2 Adherence to written agreements can be verified by the filter user through audits of the filter manufacturer.

A.4.3.3 No guidance is offered.

© ISO 2018 – All rights reserved
Copyright International Organization for Standardization
Provided by IHS Markit under license with ANSI
No reproduction or networking permitted without license from IHS
Licensee=Becton Dickinson - Loc 1-9, 11, 17, 21, 24, 29, ./5984713001, User=Chiu
Not for Resale, 02/10/2020 19:01:06 MST

A.5 Sterilizing filter characterization

A.5.1 General

The following basic information is typically available from filter manufacturers:

a) materials of the filter assembly;

b) hydrophilic/hydrophobic characteristics;

c) extractables in model solvents (e.g. water);

d) general chemical compatibility;

e) recommended sterilization procedure(s) (cumulative time, number of cycles and sterilization conditions);

f) thermal resistance;

g) particulate retentiveness;

h) maximum acceptable pressure differential;

i) flow characteristics;

j) particle and/or fibre shedding (filter media migration) characteristics in a model solvent (e.g. water);

k) microbial retentivity and correlation to integrity test data under stated test conditions;

l) nominal pore-size rating;

m) recommended integrity test procedures;

n) biological safety data.

Lot-specific quality certificates for filter cartridges might include information on the following:

o) integrity test result;

p) endotoxin or pyrogen;

q) bacterial challenge testing results;

r) oxidizable substances or total organic carbon;

s) extractable substances;

t) fibre- and particle-release characteristics;

u) biological safety data;

v) water flowrate;

w) hydraulic stress resistance;

x) thermal stress resistance.

NOTE 1 Items a), b), c) and d) are typically reported based on tests performed for each lot.

NOTE 2 The quality certificates are generally applied to filter cartridges, but can also be applied to filter discs or filter sheets.

A.5.2 Microbial removal effectiveness

No guidance is offered.

© ISO 2018 – All rights reserved

Copyright International Organization for Standardization
Provided by IHS Markit under license with ANSI
No reproduction or networking permitted without license from IHS
Licensee=Becton Dickinson - Loc 1-9, 11, 17, 21, 24, 29, ./5984713001, User=Chiu
Not for Resale, 02/10/2020 19:01:06 MST

A.5.3 Material effects

A.5.3.1 Typically materials are extracted or leached from the filter into liquids. Effects on gases might need to be considered under exceptional circumstances.

A.5.3.2 Typically materials are adsorbed onto the filter from liquids. Effects of adsorption of gases might need to be considered under exceptional circumstances.

A.5.3.3 No guidance is offered.

A.5.3.4 No guidance is offered.

A.5.4 Environmental considerations

No guidance is offered.

A.6 Process and equipment characterization

A.6.1 General

No guidance is offered.

A.6.2 Risk management

A.6.2.1 No guidance is offered.

A.6.2.2 A guidance is offered to 6.2.2 b).

Aseptic processes with sterilizing filtration systems exist in many different configurations and can include, for example, the following.

a) A process with only a single sterilizing filter typically 0,2 µm rated or less, see Figure A.2.

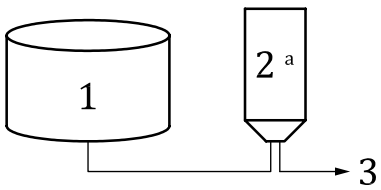

Key

1 bulk material (non-sterile)
2 sterilizing filter
3 sterile effluent
a Filter integrity test required.

Figure A.2 — Process with a single sterilizing filter

b) A process with a particulate and/or bioburden reduction filter (typically 0,45 µm or 0,2 µm rated) prior to the sterilizing filter, see Figure A.3. This process minimizes and controls the challenge to the sterilizing filter. If the bioburden of the bulk material is more than 10 CFU/100 ml, this-filtration system should be considered.

© ISO 2018 – All rights reserved
Copyright International Organization for Standardization
Provided by IHS Markit under license with ANSI
No reproduction or networking permitted without license from IHS
Licensee=Becton Dickinson - Loc 1-9, 11, 17, 21, 24, 29, ./5984713001, User=Chiu
Not for Resale, 02/10/2020 19:01:06 MST

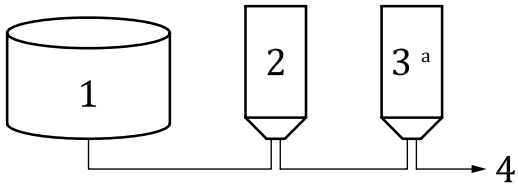

Key

1 bulk material (non-sterile)
2 bioburden reduction filter
3 sterilizing filter
4 sterile effluent
a Filter integrity test required.

Figure A.3 — Process with bioburden reduction step and single sterilizing filter

c) A process with a particulate and/or bioburden reduction filter (typically 0,45 µm or 0,2 µm rated) prior to an intermediate low bioburden hold before the sterilizing filter, see Figure A.4. This filter system is generally used when it is required to hold solutions for limited periods of time during filling. The sterility of the final filtrate is dependent on the integrity the sterilizing filter.

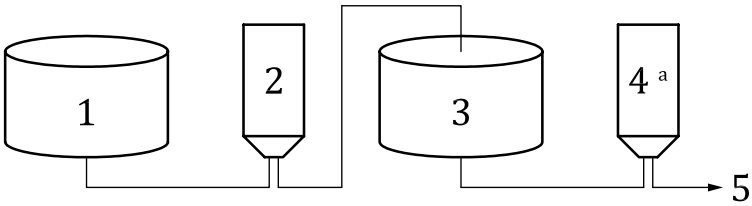

Key

1 bulk material (non-sterile)
2 bioburden reduction filter
3 low bioburden intermediate material hold
4 sterilizing filter
5 sterile effluent
a Filter integrity test required.

Figure A.4 — Process with a particulate and/or bioburden reduction filter

d) A process with two or more sterilizing filters in series, see Figure A.5. In this system, the fluid is filtered through two or more filters of the same or decreasing pore size in series (one after the other). In this situation, the filter system is considered to be a single sterilizing unit. Both filters are required to be integral to effect the validated sterilizing process.

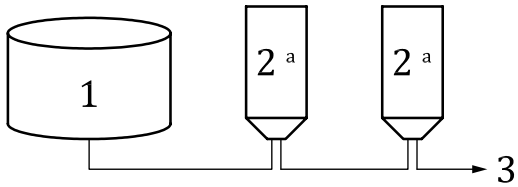

Key

1 bulk material (non-sterile)
2 sterilizing filter
3 sterile effluent
a Filter integrity test required.

Figure A.5 — Process with two sterilizing filter in series

e) A process with an identical sterilizing filter that is used as a backup (this system is often referred to as redundant filtration), see Figure A.6. In this system microbial retention is validated using only one of the two filters. The backup filter is a redundant filter and need not be integrity tested after use unless the integrity test on the primary filter fails. A redundant filter might be used to ensure against filtrate loss in the event of post-use integrity test failure of the primary sterilizing filter.

--`,,```,,,,´´´

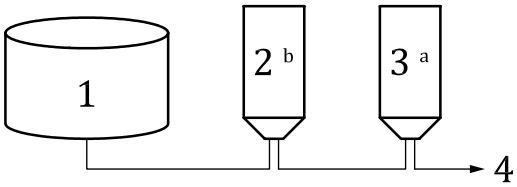

Key

1 bulk material (non-sterile)

2 back-up sterilizing filter (redundant filter)

3 main sterilizing filter

4 sterile effluent

a Filter integrity test required.

b Filter integrity test only in the event of failure of the integrity test of the main filter.

Figure A.6 — Process with a redundant sterilizing filter

f) A process with two or more sterilizing filters in series with an intermediate holding step. Product is filtered through a sterilizing filter into sterilized holding vessel and then filtered through a second sterilizing filter during delivery, see Figure A.7. This filter system is generally used when it is required to hold solutions for extended periods of time during filling. The sterility of the intermediate material hold and the final filtrate is dependent on the integrity of both filters.

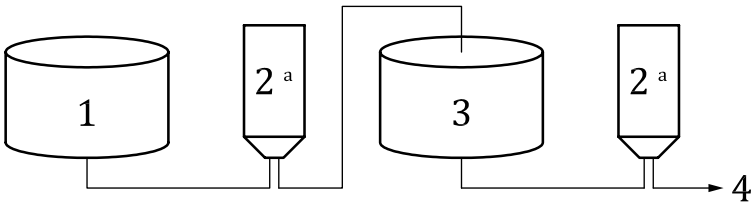

Key

1 bulk material (non-sterile)

2 sterilizing filter

3 sterile intermediate material hold

4 sterile effluent

a Filter integrity test required.

Figure A.7 — Process with serial filtration with a sterile intermediate product hold

g) A process with parallel sterilizing filters where the process stream splits and is filtered through multiple filters equally, see Figure A.8. This filter system is generally used to increase the capacity or flow rate of a filter system – all filters required to be integral.

© ISO 2018 – All rights reserved
Copyright International Organization for Standardization
Provided by IHS Markit under license with ANSI
No reproduction or networking permitted without license from IHS
Licensee=Becton Dickinson - Loc 1-9, 11, 17, 21, 24, 29, ./5984713001, User=Chiu
Not for Resale, 02/10/2020 19:01:06 MST

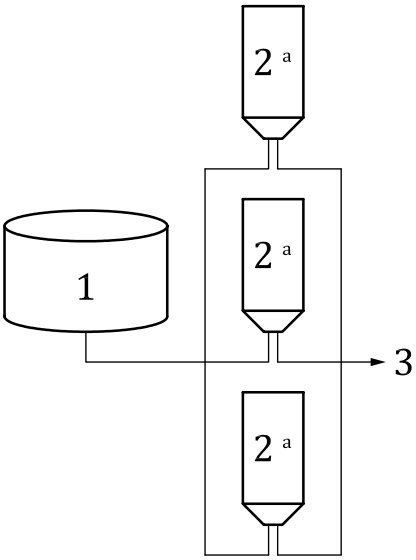

Key

1 bulk material (non-sterile)
2 sterilizing filter
3 sterile effluent
a Filter integrity test required.

Figure A.8 — Process with parallel sterilizing filters

Examples of common filtration systems are shown in Figure A.9 and Figure A.10.

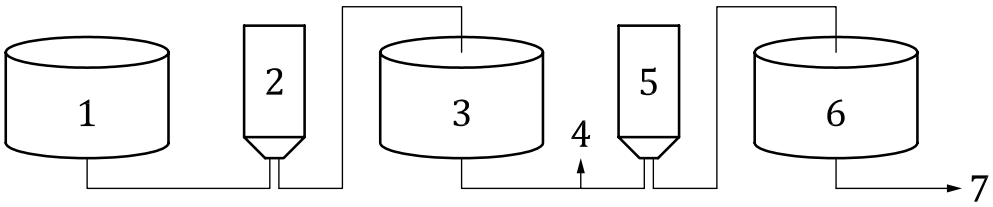

Key

1 non-sterile solution
2 0,45 µm bioburden reduction filter
3 bioburden controlled bulk solution
4 bioburden sampling port
5 0,22 µm sterilizing filter
6 sterile solution
7 to filler

Figure A.9 — Filtration of non-sterile fluid with a bioburden reduction filter followed by an optional bioburden controlled hold tank, bioburden sampling port and then a sterilizing filter

© ISO 2018 – All rights reserved

Copyright International Organization for Standardization
Provided by IHS Markit under license with ANSI
No reproduction or networking permitted without license from IHS
Licensee=Becton Dickinson - Loc 1-9, 11, 17, 21, 24, 29, ./5984713001, User=Chiu
Not for Resale, 02/10/2020 19:01:06 MST

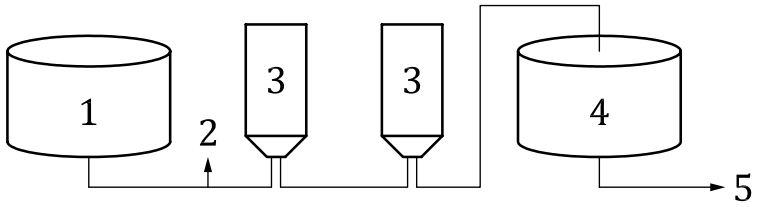

Key

1 non-sterile solution
2 bioburden sampling port
3 0,22 µm sterilizing filter
4 sterile solution
5 to filler

Figure A.10 — Multi-filter configuration in series for controlling bioburden and particulates or redundant sterile filtration

A.6.2.3 No guidance is offered.

A.6.2.4 No guidance is offered.

A.6.2.5 No guidance is offered.

A.6.2.6 No guidance is offered.

A.6.3 Process characterization

No guidance is offered.

A.6.4 Equipment characterization

A.6.4.1 No guidance is offered.

A.6.4.2 No guidance is offered.

A.6.4.3 No guidance is offered.

A.6.4.4 No guidance is offered.

A.6.4.5 A guidance is offered to 6.4.5 b):

In a serial filtration system it is critical for sterility to be maintained between each sterilizing filter during all processing steps, including pre-use integrity testing (if performed post-sterilization) and filtration.

A.6.4.6 No guidance is offered.

A.7 Fluid definition

A.7.1 General

A.7.1.1 No guidance is offered.

© ISO 2018 – All rights reserved
Copyright International Organization for Standardization
Provided by IHS Markit under license with ANSI
No reproduction or networking permitted without license from IHS
Licensee=Becton Dickinson - Loc 1-9, 11, 17, 21, 24, 29, ./5984713001, User=Chiu
Not for Resale, 02/10/2020 19:01:06 MST

A.7.1.2 It is important that the fluid to be sterilized is consistent and reproducible from batch to batch within defined limits. This assumption underpins filter validation for a given fluid. From this, suitable flow rates, processing times etc., for routine production are set.

A.7.1.3 No guidance is offered.

A.7.1.4 No guidance is offered.

A.7.1.5 No guidance is offered.

A.7.1.6 No guidance is offered.

A.7.2 Microbiological quality

A.7.2.1 Bioburden data for raw materials and intermediates (where applicable) and the fluid to be sterilized should be reviewed to determine the characteristics and level of bioburden typically present in a fluid prior to sterilizing filtration. This review should include

a) an assessment as to whether microorganisms that comprise the bioburden of the fluid or the raw materials are smaller than the standard test microorganism used to determine the microbial retention capability of the sterilizing grade filter, and

b) where bioburden microorganisms are smaller than the standard test microorganism used to determine microbial retention capability of the sterilizing grade filter, an assessment of the risk of passage of bioburden microorganisms through one or more sterilizing grade filters under controlled operational conditions.

The effectiveness of the system for bioburden control should be demonstrated.

A.7.2.2 No guidance is offered.

A.8 Process definition

A.8.1 General

No guidance is offered.

A.8.2 Filter definition and characterization

A.8.2.1 General

Filter manufacturers typically publish results of tests performed according to applicable compendial methods to qualify the filter. Tests commonly performed by the filter manufacturer include the following:

a) bacterial retention in water or saline lactose broth with integrity test correlation;

b) chemical capability and effect on filter integrity;

c) extractables;

d) sterilization methods and effect on filter integrity;

e) integrity test in water or solvent;

f) toxicity testing;

g) particulate matter;

© ISO 2018 – All rights reserved

Copyright International Organization for Standardization
Provided by IHS Markit under license with ANSI
No reproduction or networking permitted without license from IHS
Licensee=Becton Dickinson - Loc 1-9, 11, 17, 21, 24, 29, ./5984713001, User=Chiu
Not for Resale, 02/10/2020 19:01:06 MST

h) non-fibre release;

i) TOC and conductivity.

A.8.2.2 Compatibility between the filter and fluid

Aseptic filtration is vulnerable to non-uniformity of the filter, chemical attack on the filter medium, mechanical defects in configuration, overpressurization, non-sterility of the filtration equipment and excessive bioburden loading. Filters are available in varying sizes, configurations and membrane chemistries.

A.8.2.3 Filter use

A.8.2.3.1 No guidance is offered.

A.8.2.3.2 A general guidance to 8.2.3.2 is offered.

Hydrophobic sterilizing grade filters used for the sterile filtration of gas, or for venting purposes are often reused multiple times after steam sterilization between batches or campaigns.

Sterilizing grade filters for liquids are generally intended for single batch use or for campaign use (where the filter remains in place for more than one batch); however, some might be supplied for multiple reuse (where the filter is cleaned and re-sterilized between batches). Filters should not be reused for chemically different liquids unless after proper cleaning and sterilization the leachables and uptake are validated.

The reuse of a sterilizing-grade filter is not generally recommended where that filter is used in the final step of a sterilizing filtration process to produce a sterile liquid filtrate. The reuse of a sterilizing-grade filter might be considered appropriate in circumstances when the challenge liquid is of low bioburden and where

a) different batches of the same liquid are filtered, and

b) the total volume of liquid filtered does not compromise filter capacity.

NOTE 1 Regulatory agencies do not prohibit the reuse of sterilizing-grade filters for liquids; however, they do not generally advocate the practice in aseptic processing because of the critical nature of the sterilizing filtration process. The added complexity of reuse can present a compliance risk that might entail additional regulatory scrutiny.

NOTE 2 A sterilizing grade filter can be used for in-process particulate or bioburden control prior to the sterilizing filtration step. In this situation the filtrate from the bioburden control filter is not claimed to be sterile.

Caution should be exercised where filter packaging states for example, that a sterilizing-grade filter can withstand 25 steam sterilization cycles at 121 °C for 20 min. This statement should not automatically be interpreted to mean that the filter can be re-sterilized and reused up to 25 times to sterilize a liquid. This statement might refer only to robustness of the filter in terms of the margin of safety regarding the number of sterilization cycles the filter can safely withstand before polymer degradation is a concern. This filter processing information is important to a product manufacturer when re-sterilization might be required, however, it should not be simply extrapolated to repeated re-sterilization and reuse of the filter.

A guidance to 8.2.3.2 b) is offered as follows.

Validation and qualification studies to demonstrate that filter reuse during the filtration process for a given liquid does not compromise performance of the sterilizing filter or filtrate quality should consider the following but is not restricted to the following.

a) Any reuse effects on the filter from the filter user's processes, for example exposure to multiple filtration, flushing, cleaning, rinsing, drying and sterilization processes.

© ISO 2018 – All rights reserved
Copyright International Organization for Standardization
Provided by IHS Markit under license with ANSI
No reproduction or networking permitted without license from IHS
Licensee=Becton Dickinson - Loc 1-9, 11, 17, 21, 24, 29, ./5984713001, User=Chiu
Not for Resale, 02/10/2020 19:01:06 MST

b) Storage conditions for reused filters, including after immediate use and after sterilization prior to reuse.

c) Leaching of contaminants or cleaning agent residues from used filters. This should include the potential for contamination with bacterial endotoxin as a result of lysis of bacterial cells from carryover of bioburden from batch to batch.

Bacterial retention validation studies should be conducted on filters at the extent of reuse and which have been exposed to actual production conditions (including worst-case processing conditions). These studies are necessary as post-use integrity testing in the absence of bacterial retention studies is not sufficient to determine if multiple reuse adversely affects the retention capabilities of a sterilizing filter.

A.8.3 Filtration process definition

No guidance is offered.

A.8.4 Integrity testing process definition

A.8.4.1 No guidance is offered.

A.8.4.2 Integrity testing prior to filtration may be omitted when

a) filtrate is automatically rejected in the event of a post use integrity test failure, or

b) process risk assessment permits re-filtration.

Figures A.11 and A.12 are examples of methods for post sterilization pre-use integrity testing designed to maintain system sterility.

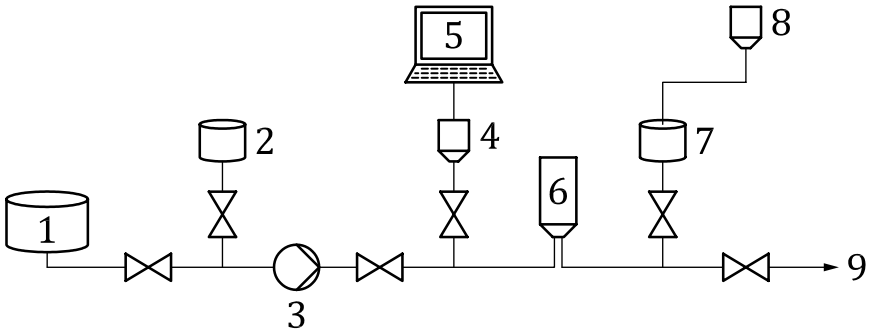

Key

1 product
2 wetting/flushing fluid
3 pump
4 0,2 µm gas filter
5 integrity test instrument
6 0,2 µm product filter
7 wetting and flushing biocontainer
8 0,2 µm gas filter
9 sterile connector

Figure A.11 — Typical equipment for pre-use integrity test on single 0,2 µm filter in a pre-sterilized single-use system

Copyright International Organization for Standardization
Provided by IHS Markit under license with ANSI
No reproduction or networking permitted without license from IHS
Licensee=Becton Dickinson - Loc 1-9, 11, 17, 21, 24, 29, ./5984713001, User=Chiu
Not for Resale, 02/10/2020 19:01:06 MST

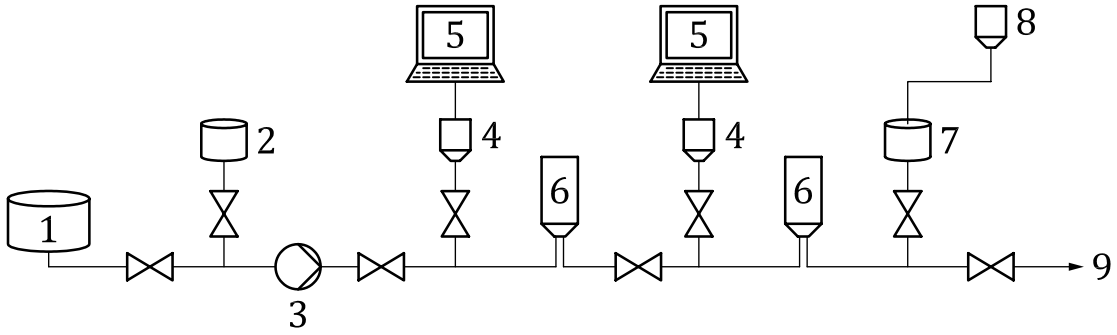

Key

1 product
2 wetting/flushing fluid
3 pump
4 0,2 µm gas filter
5 integrity test instrument
6 0,2 µm product filter
7 wetting and flushing biocontainer
8 0,2 µm gas filter
9 sterile connector

Figure A.12 — Typical equipment for pre-use integrity test on two single 0,2 µm filter in a pre-sterilized single-use system

A.8.4.3 No guidance is offered.

A.8.4.4 No guidance is offered.

A.8.4.5 No guidance is offered.

A.8.4.6 No guidance is offered.

A.9 Validation

A.9.1 General

No guidance is offered.

A.9.2 Validation of fluid-specific microbial retention by sterilizing filters for liquids

A.9.2.1 General

A.9.2.1.1 No guidance is offered.

A.9.2.1.2 Previous versions of this document required that integrity test results for one of the filters tested should lie within 10 % of the manufacturer's limits for physical integrity test parameters. With improvements in filter manufacture it may no longer be possible to source filters with integrity test parameters >40 % from the middle of the specification in all cases.

A.9.2.1.3 No guidance is offered.

A.9.2.1.4 No guidance is offered.

A.9.2.1.5 No guidance is offered.

© ISO 2018 – All rights reserved
Copyright International Organization for Standardization
Provided by IHS Markit under license with ANSI
No reproduction or networking permitted without license from IHS
Licensee=Becton Dickinson - Loc 1-9, 11, 17, 21, 24, 29, ./5984713001, User=Chiu
Not for Resale, 02/10/2020 19:01:06 MST

A.9.2.2 Test organism

A.9.2.2.1 No guidance is offered.

A.9.2.2.2 No guidance is offered.

A.9.2.2.3 In culturing *B. diminuta* the culture conditions might contribute to reduced size and greater filter penetration[8].

A review of environmental monitoring, raw material and pre-filtration bioburden isolates is usually conducted to identify small organisms in the facility and raw materials. Where appropriate the isolates are sized in the fluid to be filtered and compared with *B. diminuta*.

The use of water from systems that are not operated under self-sanitizing conditions might contribute to the presence of diminutive organisms.

A.9.2.2.4 No guidance is offered.

A.9.2.2.5 No guidance is offered.

A.9.2.2.6 Growing *A. laidlawii* in TSB might result in an apparent increase in the percentage of very small cells but these cells might be less penetrative than cells grown under other conditions. A growth medium supplemented with 10 % horse serum might produce more penetrative cells (which are not necessarily the smallest cells)[9].

A.9.2.2.7 No guidance is offered.

A.9.2.2.8 No guidance is offered.

A.9.2.2.9 No guidance is offered.

A.9.2.2.10 No guidance is offered.

A.9.3 Validation of the integrity test for sterilizing filters for liquids

No guidance is offered.

A.9.4 Qualification of filter interactions with the process fluid

No guidance is offered.

A.9.5 Validation of the sterilization of filter system

A.9.5.1 Consideration of the sterilization process for a sterilizing grade filter should include the potential for the process to cause damage to the filter or filtration system. For example, steam sterilization in place might be used to eliminate or to reduce aseptic connections; however, there might be a risk of damage to a filter membrane due to dynamic flow through the filter at elevated temperature. There is less risk of physical damage to a filter membrane from static processes such as irradiation sterilization or moist heat sterilization in a steam sterilizer; however, the use of these processes might necessitate the use of more aseptic connections.

A.9.5.2 No guidance is offered.

© ISO 2018 – All rights reserved

Copyright International Organization for Standardization
Provided by IHS Markit under license with ANSI
No reproduction or networking permitted without license from IHS
Licensee=Becton Dickinson - Loc 1-9, 11, 17, 21, 24, 29, ./5984713001, User=Chiu
Not for Resale, 02/10/2020 19:01:06 MST

A.9.6 Validation of fluid-specific microbial retention by sterilizing filters for gases

A.9.6.1 General

Gas filters are used in aseptic processing to vent breathing of aseptic processing tanks, vacuum breaks for autoclaves and lyophilizers, nitrogen blanket for oxygen-sensitive products and blow-fill-seal equipment.

A.9.6.2 Aerosol retention

Liquid or aerosol challenges can be used to qualify the retention capability of gas filters. Liquid bacterial challenges represent a worst-case condition because the retention efficiency is much lower in liquids than in gases. Conversely the enhanced efficiency in gases, bacterial aerosol challenge is less rigorous than a liquid challenge even though it represents use conditions.

A.9.6.3 Validation of physical integrity testing

No guidance is offered.

A.9.6.4 Compatibility and service life

No guidance is offered.

A.9.6.5 Validation of the sterilization of the filter system for gases

No guidance is offered.

A.10 Routine monitoring and control

No guidance is offered.

A.11 Product release from sterilizing filtration

No guidance is offered.

A.12 Maintaining process effectiveness

A.12.1 General

No guidance is offered.

A.12.2 Recalibration

No guidance is offered.

A.12.3 Maintenance of equipment

No guidance is offered.

A.12.4 Requalification

No guidance is offered.

© ISO 2018 – All rights reserved
Copyright International Organization for Standardization
Provided by IHS Markit under license with ANSI
No reproduction or networking permitted without license from IHS
Licensee=Becton Dickinson - Loc 1-9, 11, 17, 21, 24, 29, ./5984713001, User=Chiu
Not for Resale, 02/10/2020 19:01:06 MST

A.12.5 Assessment of change

If there is a change in the fluid to be filtered (e.g. changes in raw materials, chemical composition, concentrations, viscosity, changes to processing conditions), it is necessary to assess the change to see if it could have an adverse effect on the performance of the sterilizing grade filter, or whether it might invalidate the existing filter validation studies.

© ISO 2018 – All rights reserved

Copyright International Organization for Standardization
Provided by IHS Markit under license with ANSI
No reproduction or networking permitted without license from IHS
Licensee=Becton Dickinson - Loc 1-9, 11, 17, 21, 24, 29, ./5984713001, User=Chiu
Not for Resale, 02/10/2020 19:01:06 MST

Bibliography

[1] ISO 10993-12:2012, *Biological evaluation of medical devices — Part 12: Sample preparation and reference materials*

[2] ISO 13408-3, *Aseptic processing of health care products — Part 3: Lyophilization*

[3] ISO 13408-4, *Aseptic processing of health care products — Part 4: Clean-in-place technologies*

[4] ISO 13408-6, *Aseptic processing of health care products — Part 6: Isolator systems*

[5] ISO 13408-7, *Aseptic processing of health care products — Part 7: Alternative processes for medical devices and combination products*

[6] ISO 11737-1, *Sterilization of medical devices - Microbiological methods - Part 1: Determination of a population of microorganisms on products*

[7] ISO/IEC 90003, *Software engineering — Guidelines for the application of ISO 9001:2008 to computer software*

[8] Lee S-H, Lee S-S, Kim C-W Changes in the Cell Size of *Brevundimonas diminuta* Using Different Growth Agitation Rates. PDA J. Pharm. Sci. Technol. 2002, **56** pp. 99–108

[9] Parenteral Drug Association. PDA Technical Report No. 75 (TR 75) Consensus Method for Rating 0.1µm Mycoplasma Reduction Filters, 2016

© ISO 2018 – All rights reserved

Copyright International Organization for Standardization
Provided by IHS Markit under license with ANSI
No reproduction or networking permitted without license from IHS

Licensee=Becton Dickinson - Loc 1-9, 11, 17, 21, 24, 29, ./5984713001, User=Chiu
Not for Resale, 02/10/2020 19:01:06 MST

--`,,```,,,,````-`-`,,`,,`,`,,`---

Copyright International Organization for Standardization
Provided by IHS Markit under license with ANSI
No reproduction or networking permitted without license from IHS

Licensee=Becton Dickinson - Loc 1-9, 11, 17, 21, 24, 29, ./5984713001, User=Chiu
Not for Resale, 02/10/2020 19:01:06 MST

ICS 11.080.01

Price based on 34 pages

© ISO 2018 – All rights reserved

Copyright International Organization for Standardization
Provided by IHS Markit under license with ANSI
No reproduction or networking permitted without license from IHS

Licensee=Becton Dickinson - Loc 1-9, 11, 17, 21, 24, 29, ./5984713001, User=Chiu
Not for Resale, 02/10/2020 19:01:06 MST